Hood Latch and Components — Exploded View

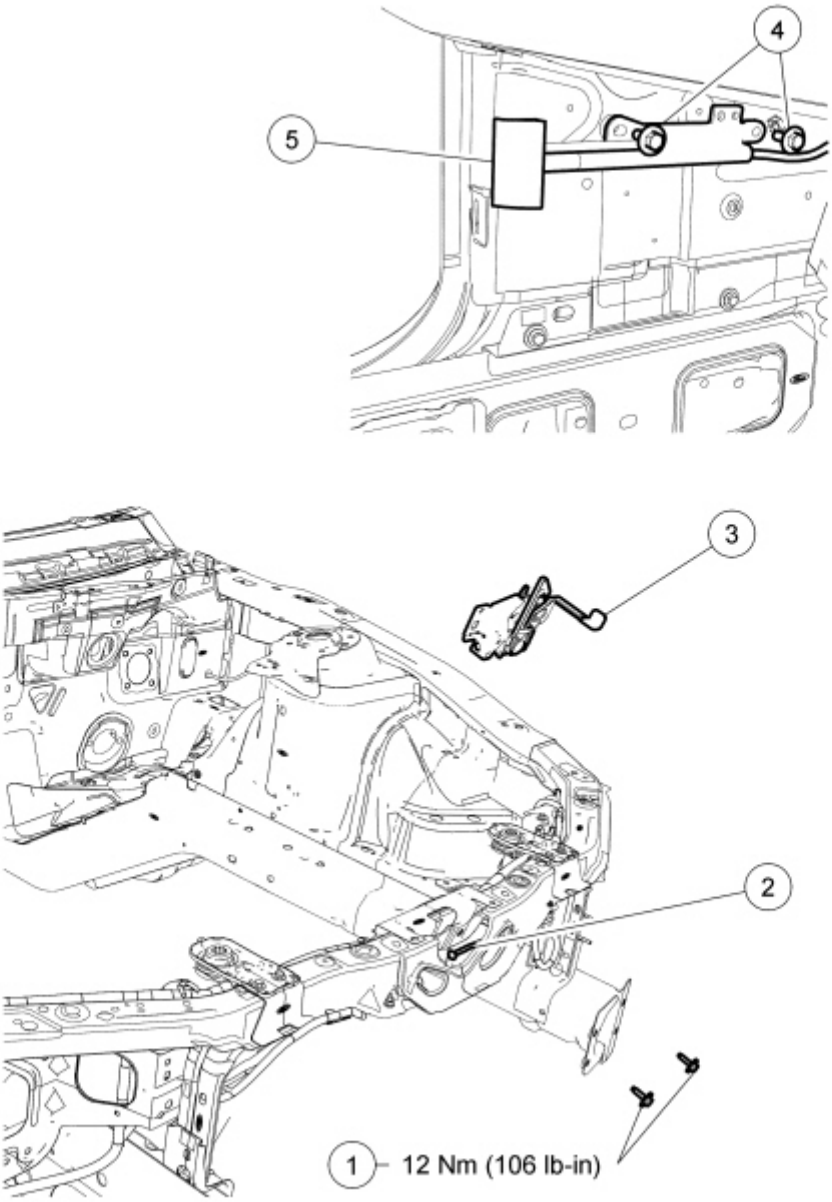

N0082002

Item	Part Number	Description
1	W611103	Hood latch bolts (2 required)
2	—	Hood latch release cable (part of 16916)
3	16700	Hood latch
4	N808727	Hood latch release handle screws (2 required)
5	16916	Hood latch release handle

1. For additional information, refer to the procedures in this section.